Specifications for EMH Style UHB-800
Top Running Bogie End Trucks
32 In. Diameter Wheels

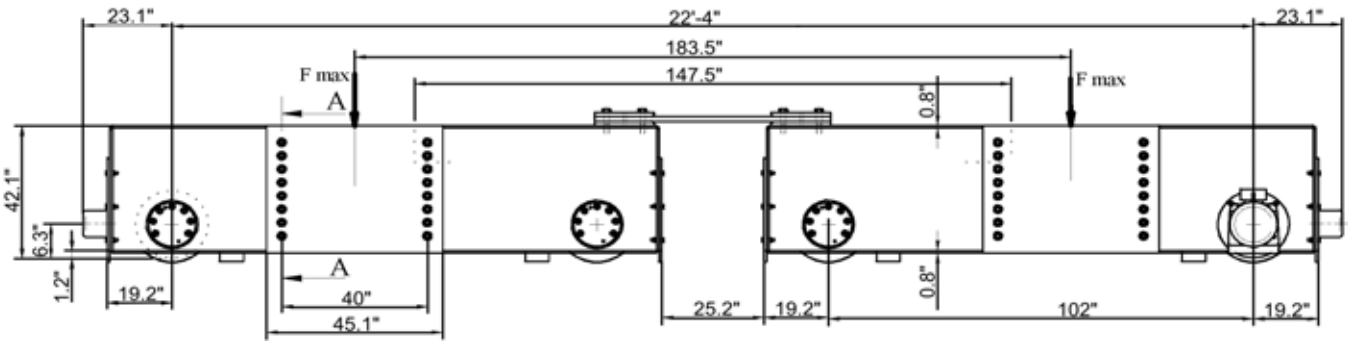

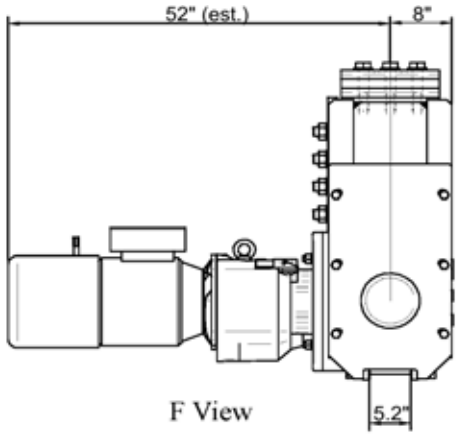

F View

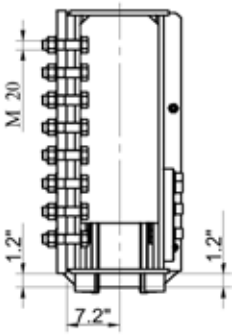

Section A-A

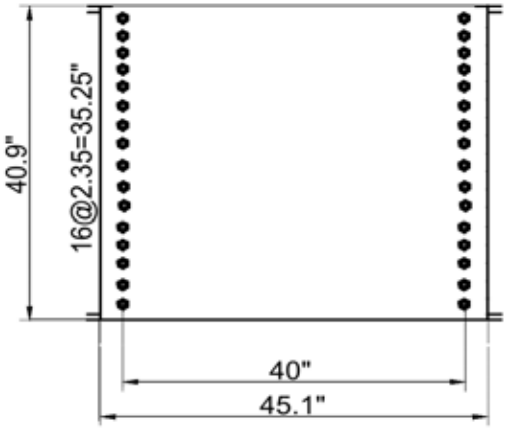

Endtruck/Girder Connection Plate

FRICTION SURFACE MUST BE ABSOLUTELY FREE FROM RUST, DUST AND OIL

Model No.	No. of Drives	F Load Lbs.	120 fpm Motor HP	Wt. per Pr. Lbs.
UHB-800.1100.6800.1.35.127.4	4	321,460	4 x 10	33,000

Engineered Material Handling